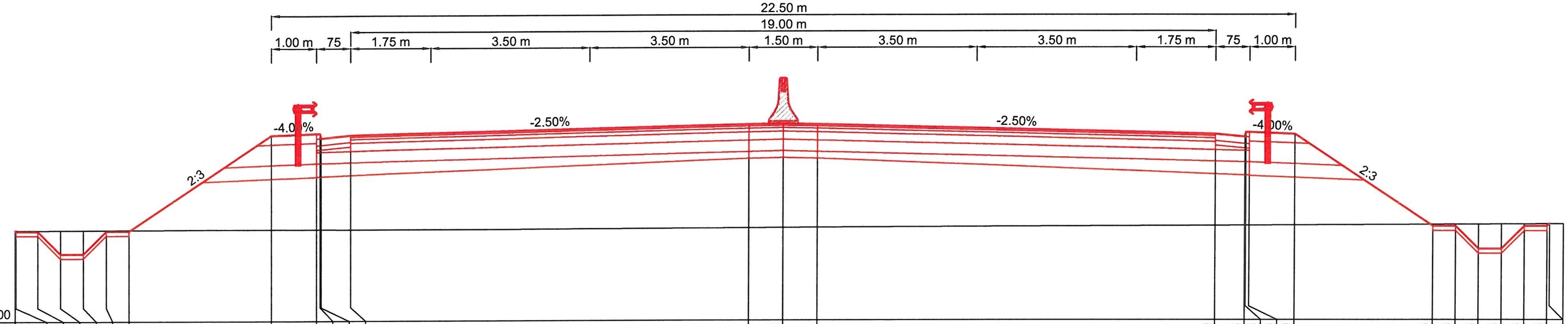

COTE PROIECT	115.01	114.99	114.99	114.49	114.49	114.99	114.99	117.09	117.13	117.13	117.03	117.09	117.31	117.33
COTE TEREN	115.01	115.01	115.01	115.01	115.01	115.01	115.01	115.02	115.02	115.02	115.02	115.02	115.04	115.04
DISTANTE	-16.92	-16.90	-16.40	-15.90	-15.40	-14.90	-14.40	-11.25	-10.25	-10.17	-10.15	-9.50	-0.75	0.00

COTE PROIECT	117.31	117.09	117.03	117.13	117.13	117.09	115.06	115.06	114.56	114.56	115.06	115.06	115.11
COTE TEREN	115.04	115.08	115.08	115.08	115.08	115.09	115.10	115.10	115.10	115.11	115.11	115.11	115.11
DISTANTE	0.75	9.50	10.15	10.17	10.25	11.25	14.30	14.80	15.30	15.80	16.30	16.80	16.85

KM = 8550.00

SUPERVIZOR
D.R.D.P. TIMIŞOARA
BUN DE EXECUȚIE
DATA: 01.04.2022

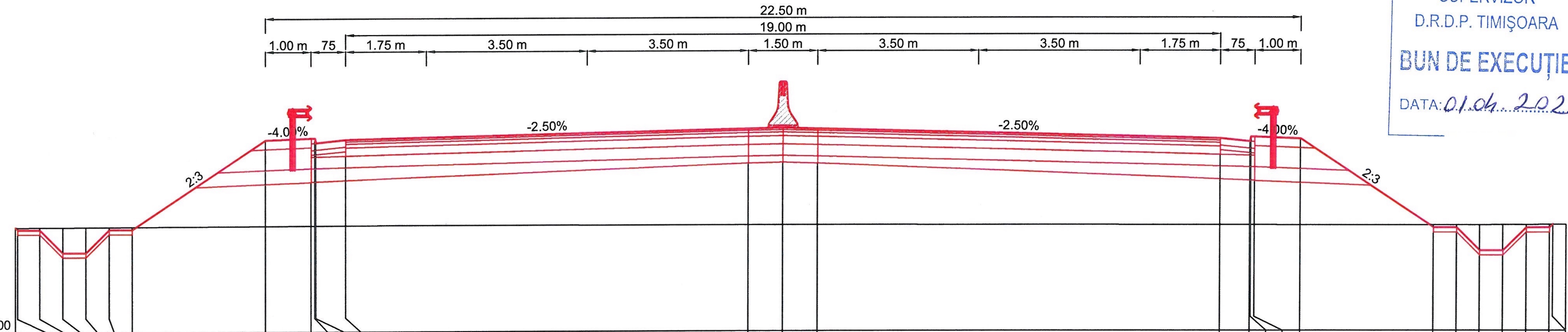

COTE PROIECT	115.27	115.23	115.23	114.73	114.73	115.23	115.23	117.16	117.20	117.20	117.10	117.17	117.38	117.40
COTE TEREN	115.27	115.27	115.28	115.28	115.28	115.28	115.29	115.30	115.30	115.30	115.30	115.30	115.30	115.30
DISTANTE	-16.70	-16.65	-16.15	-15.65	-15.15	-14.65	-14.15	-11.25	-10.25	-10.17	-10.15	-9.50	-0.75	0.00

COTE PROIECT	117.38	117.17	117.10	117.20	117.20	117.16	115.23	115.23	114.73	114.73	115.23	115.23	115.30
COTE TEREN	115.30	115.30	115.29	115.29	115.29	115.29	115.29	115.29	115.29	115.30	115.30	115.30	115.30
DISTANTE	0.75	9.50	10.15	10.17	10.25	11.25	14.15	14.65	15.15	15.65	16.15	16.65	16.72

KM = 8525.00

POPESCU A. CĂTĂLIN

SOCIETATEA COMERCIALA TOTAL ROAD S.R.L. BUCURESTI ROMANIA

BENEFICIAR:	ANTREPRENOR:	TITLU PROIECT		SPECIFICATIE	NUME	SEMNATURA	DATA	TITLU PLANSA:	
COMPANIA NATIONALA DE ADMINISTRAREA INFRASTRUCTURII RUTIERE S.A. (C.N.A.I.R. S.A.)	TODINI CONSTRUZIONI GENERALI S.p.A.	PROIECTARE SI EXECUȚIE „DRUM DE LEGĂTURĂ AUTOSTRADA A1 ARAD - TIMIȘOARA - DN 69"		DESENAT	Teh. Sorin VASILACHE		Martie 2022	LUCRARI DE INFRASTRUCTURA RUTIERA PROFILURI TRANSVERSALE CURENTE DRUM DE LEGATURA DN 69 - A1	
		FAZA PROIECT	CONTRACT NR.	PROIECTAT	Ing. Mihai COROIAN		MĂRIMEA		
		PROIECT TEHNIC DE EXECUTIE (P.T.E.)	92/7703/01.02.2021	SEF PROIECT	Ing. Catalin GRUIANU		A3	NUMAR PLANSA:	PICHET
			PROIECT NR.	VERIFICAT	Ing. Adrian NISTOR		SCARĂ	PTC - 188	-
			08/2021				1:100		

Revizie		
NR.	DATA	DESCRIERE
0	08.2021	Emitere P.T.E.
1	09.2021	Conf. nr.290/DLA1-224
2	02.2022	Conf. ASR 92/93833

PAGE 1 / 1